# **LEVEL 2** - DH-48A11K

# **Rosa** - 11kW


NEMA 4R Authorization Management Repairable Outdoors

# Content

# 1. Important Safety Instructions

Please read all Important Safety Instructions as well as charging instructions in your vehicle owner's manual before attempting to charge your electric vehicle. Failure to do so can result in death or severe injury. Save this user manual for future reference. There are many safety features built into the charger. Read all the safety information and warnings in this manual to avoid any risks or hazards and risks associated with using this charger.

## ⚠ Warning

When using electric products, basic precautions should always be followed. This manual contains important instructions, including the following, which must be followed during installation, operation and maintenance.

- Do not install or use the charger near flammable, explosive, corrosive, or combustible materials, chemicals, or vapors.
- Turn off the input power of the charger before performing any maintenance on the charger.
- The device is designed only for vehicles that are compatible with the SAE J1772 Level 2 charging standard.
- Do not use the charger if it is defective, of if it appears cracked, frayed, broken, or damaged.
- Do not attempt to open, disassemble, repair, tamper with, or modify the charger. Contact our Customer Service department if you have any questions or require the replacement or repair of any parts.
- Do not use the charger when either you, the vehicle or charger is exposed to severe rain, snow, or other severe weather.
- When transporting the charger, handle it with care and do not drag or step on the device.
- Do not touch the charging connector terminal with any sharp metallic objects, in order to prevent damage.
- Do not forcefully pull the charging cable, damage it with sharp objects, or place fingers or insert foreign objects into any part of the charging connector.
- Risk of explosion. This device has arcing or sparking parts that should not be exposed to flammable vapors.

- Risk of electric shock. Do not remove the cover or attempt to open the enclosure of this device. There are no user-serviceable parts inside. Contact a qualified service company if you require any service repairs.
- To reduce the risk of fire, connect only to a circuit provided with 60 amperes maximum branch circuit overcurrent protection in accordance with the national Electrical Code, ANSI/NFPA 70, and the Canadian Electrical Code, Part I, C22.1
- This charger should be installed, adjusted, and serviced by a qualified electrician or a person familiar with the construction and operation of this type of charger and the dangers involved. Failure to observe this precaution could result in damage to the charger, or even severe injury or death.
- Incorrect installation and testing of the charger could potentially damage either the vehicle's battery and the charger. This type is damage is not covered by our warranty policy.
- Ensure that the charging cable is well-positioned during the charging process, to avoid the cable getting stepped on, tripped over, or subjected to damage or stress.
- Do not use this charger with a frayed charging cable having damaged insulation or any other sign of damage.
- Ensure that the wire type, diameter, current rating, and temperature rating comply with the local electrical standards and requirements in your local area.
- Before starting the installation, turn off all power.
- For permanently connected equipment, protective grounding and bonding terminals-field wiring terminals for connection of equipment-grounding conductors are identified by: "G," "GR," "GND," "Ground," "Grounding" or the ground symbol, either on a wiring diagram provided on the unit, or a marking on the wiring diagram attached to the unit.
- This device should be supervised when used around children.
- Do not put fingers into the electric vehicle connector
- The device is not to be lifted or carried by either the flexible cord or the EV cable

## 2. Federal Communication Commission Interference Statement

This device complies with Part 15 of the FCC Rules. Operation is subject to the following two conditions: (1) This device may not cause harmful interference, and (2) this device must accept any interference received, including interference that may cause undesired operation.

This equipment has been tested and found to comply with the limits for a Class B digital device, pursuant to Part 15 of the FCC Rules. These limits are designed to provide reasonable protection against harmful interference in a residential installation. This equipment generates, uses and can radiate radio frequency energy and, if not installed and used in accordance with the instructions, may cause harmful interference to radio communications. However, there is no guarantee that interference will not occur in a particular installation. If this equipment does cause harmful interference to radio or television reception, which can be determined by turning the equipment off and on, the user is encouraged to try to correct the interference by one of the following measures:

- Reorient or relocate the receiving antenna.
- Increase the separation between the equipment and receiver.
- Connect the equipment into an outlet on a circuit different from that to which the receiver is connected.
- Consult the dealer or an experienced radio/TV technician for help.

FCC Caution: Any changes or modifications not expressly approved by the party responsible for compliance could void the user's authority to operate this equipment.

This transmitter must not be co-located or operating in conjunction with any other antenna or transmitter.

**Radiation Exposure Statement:**
This equipment complies with FCC radiation exposure limits set forth for an uncontrolled environment. This equipment should be installed and operated with minimum distance 20cm between the radiator & your body.

# 3. Interface

## 3.1 High-End Edition

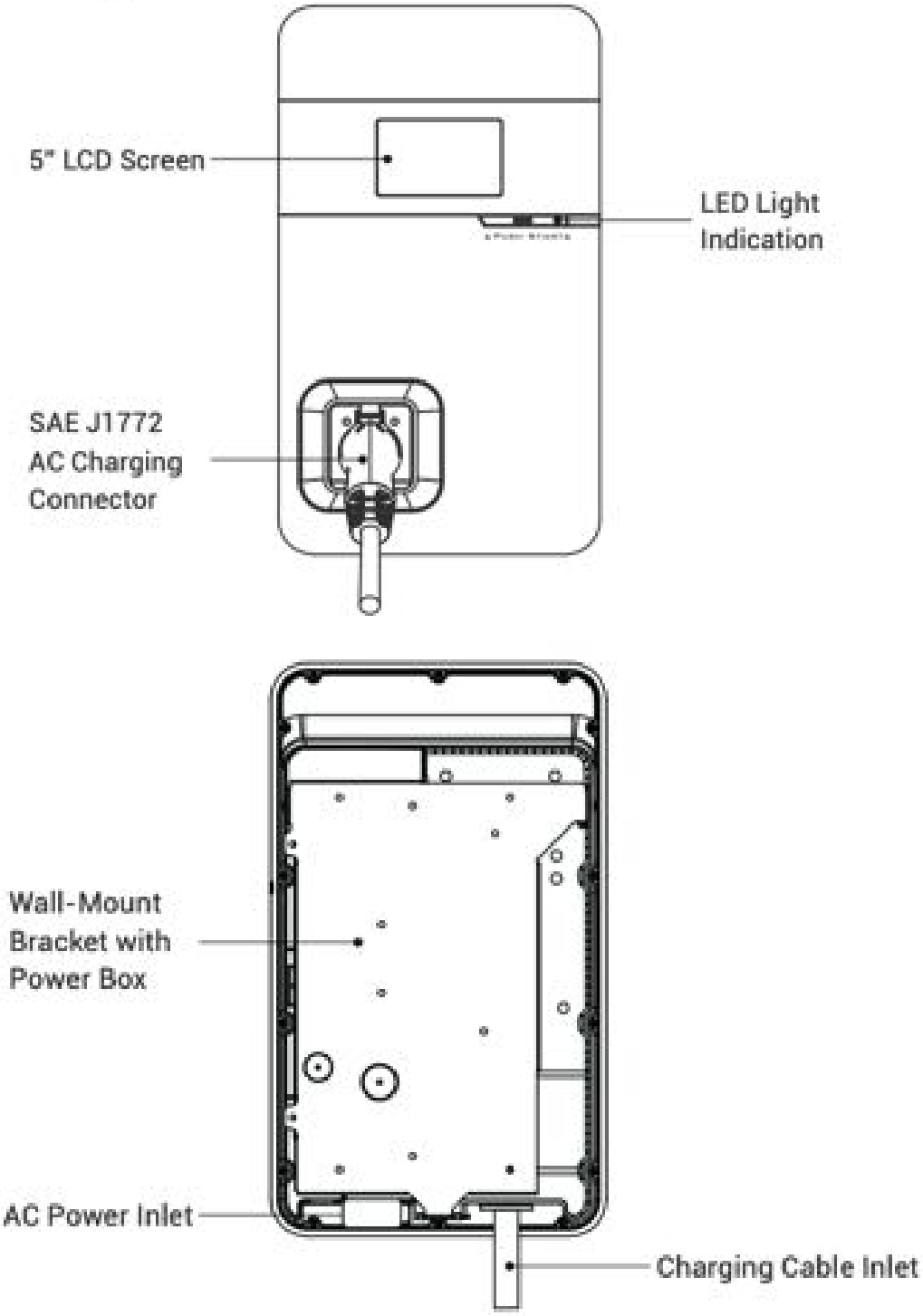

## 3.2 Classic Edition

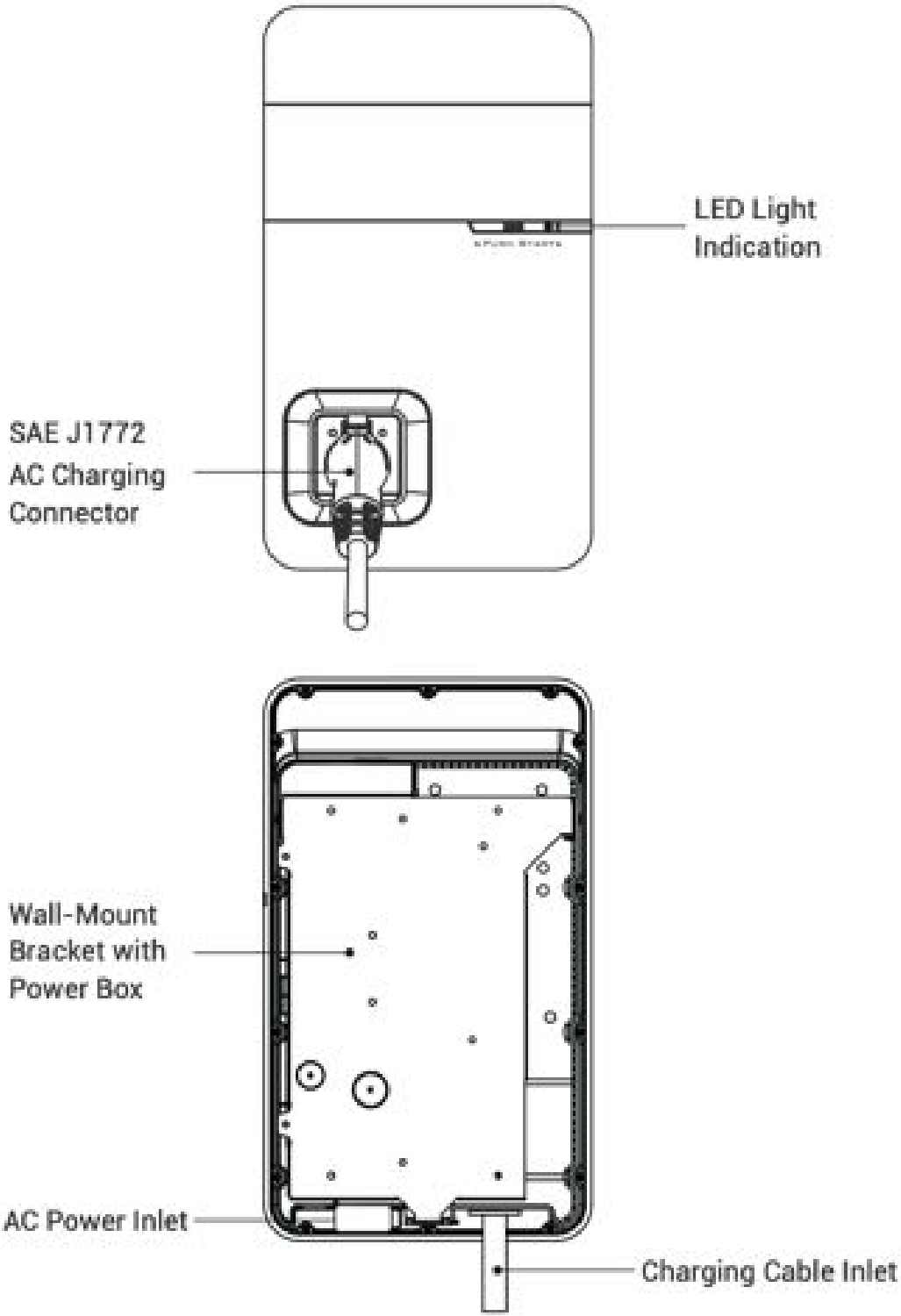

## 3.3 Bottom Case and Wire box

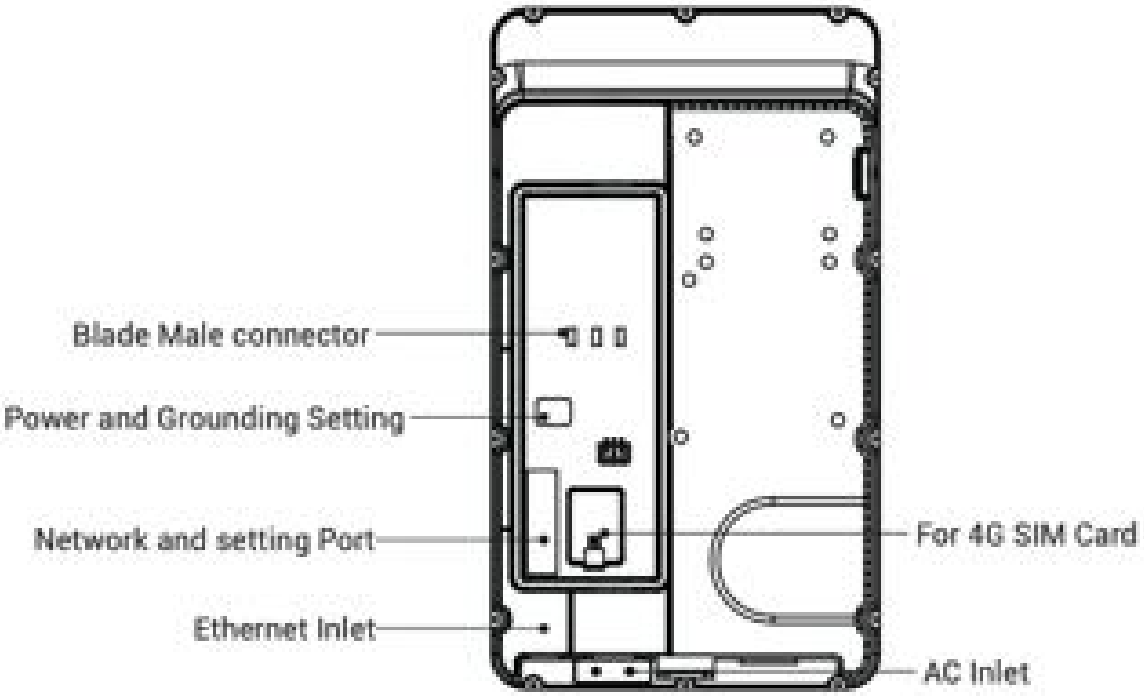


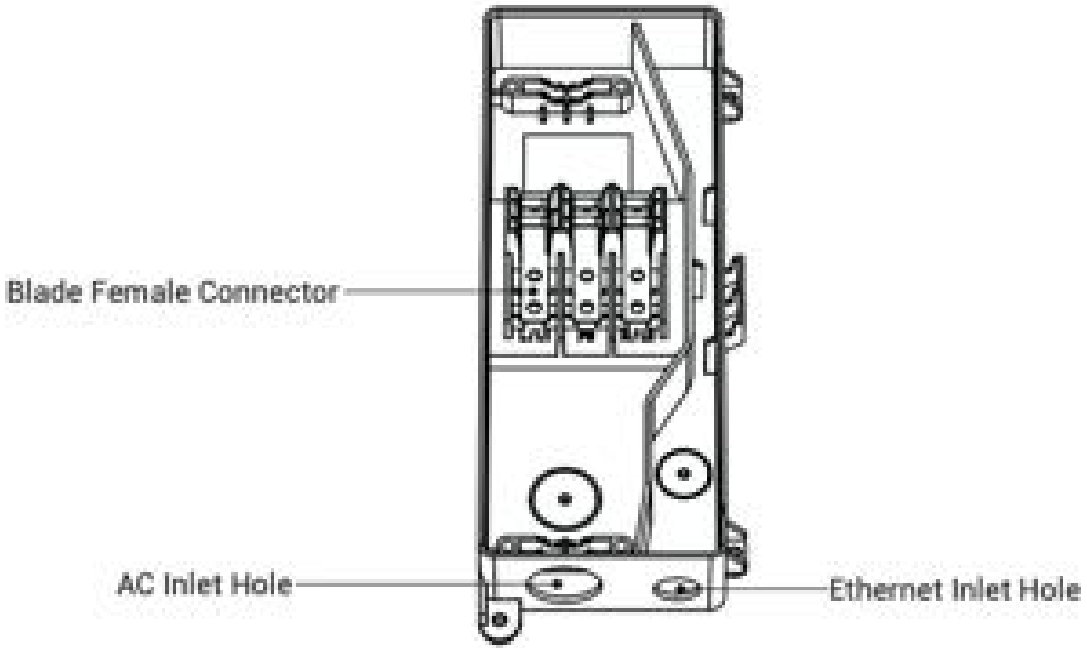

# 4. Dimensions (unit:mm)

## 4.1 Main Size of Charger

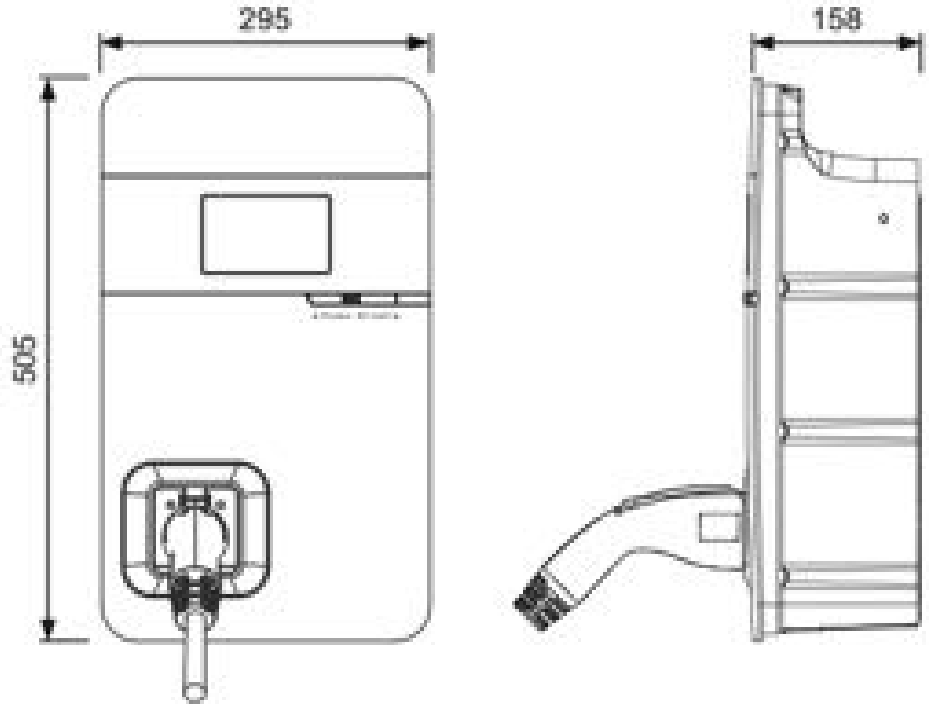


## 4.2 Wall-Mount Bracket

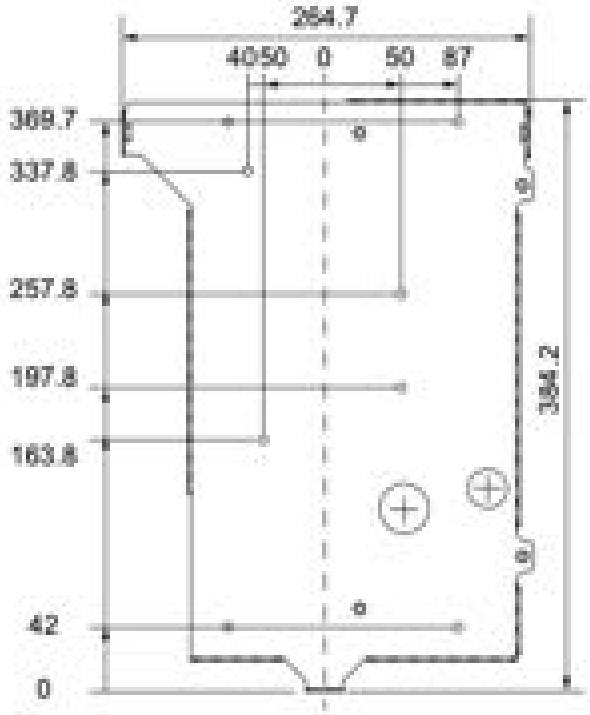

# 5. Specifications

**POWER SPECIFICATIONS** *(*Copper Conductors Only)*

| | |
|---|---|
| Maximum Power | 11kw- 208-240 VAC |
| Input Voltage Frequency | 208-240 VAC / Single Phase 50 /60 Hz |
| Output Amperage | 48A |
| (Optional Output Amp) | (32A, 20A, 15A) |
| Input Power Connection | 60 Amp Branch Circuit (COPPER CONDUCTOR ONLY) |
| Circuit Breaker Size | 60 Amp 2-Pole Non-GFCI* |
| (Optional Breaker Size) | (40A, 20A,15A) |
| Wire Size | #6 Copper Standard |
| Wire Size for 7 KW Output | #8 Copper Standard |
| Wiring Standard | 3-Wire,L1,L2, Earth |

***Do not exceed recommended value for breaker sizing***

**OPERATIONAL SPECIFICATIONS**

| | |
|---|---|
| Mounting Type | Wall Mount |
| Enclosure Rating | NEMA 4R |
| Operating Temperature | -86 to +122 F |
| Storage Temperature | -104 F to +258 F |
| Operating Humidity | Up to 85% @ 122-F, Non Condensing |
| Storage Humidity | Up to 95% @ 122-F, Non Condensing |
| Altitude | 6561 Ft. |

| **Switch Setting Number** | **0** | **9** | **A** | **B** |
|---|---|---|---|---|
| Maximum Output Current | Test Mode | 32A | 40A | 48A |
| * Maximum Breaker Size | 40A 2-Pole | 40A 2-Pole | 50A 2-Pole | 60A 2- Pole |

**SAFETY AND COMPLIANCE SPECIFICATIONS**

| | |
|---|---|
| Power Control | On/Off Switch |
| Output Current Control | Rotary Switch |
| Ground Fault Detection | 20 mA CCID with auto retry |
| Control Pilot Fault Protection | OCP,OTP |
| Input Protection | UVP,OVP,Surge Protection, Ground Fault |
| Output Protection | OCP, Control Pilot Fault, Residual Current Protection |
| Output Interface | J1772 AC Charging Connector |
| Safety and Compliance | UL and cUL listed, Complies with UL 2594, UL 2231-1, UL 2231-2 and NEC article 625 |
| EMC Compliance | FCC part 15 class A |
| Station Surge Protection | 6 kv @ 3,000A. In geographic areas subject to frequent thunderstorms supplemental surge protection at the service panel is recommended. |

**FUNCTIONAL SPECIFICATIONS**

| | |
|---|---|
| Charger Connector Type | SAE J1772 Lockable |
| Charger Cable Length | 16 Feet |
| Display | LED Pilot Lamp(standard)<br>5-Inch LCD (High End) |
| Authentication | RFID (ISO/IEC 14443-A/B, ISO/IEC 15693, Felica/Milfare) ISO15118 |

**CONNECTIVITY SPECIFICATIONS**

| | |
|---|---|
| 2G,3G,4G Function | LTE,UMTS/HSPA+,GSM, GPRS/EDGE |
| Wi Fi Function | 802.11 b/g/n |
| RJ45 Cable Inlet | 10M/100M Base T |

**GENERIC SPECIFICATIONS**

| | |
|---|---|
| Dimensions | 12"x7"x20" |
| Weight | 11- lbs |

## 6. Status Description of the Charger Indication Lights

| WORK STATUS | BLUE | GREEN | RED |
|---|---|---|---|
| **Initial** | Constantly Bright White | | |
| **Idle Backend Connected Sleep** | - | Breath | - |
| **Idle Backend Connected** | - | Constantly White | - |
| **Idle Backend Disconnected Sleep** | - | Breathing (Yellow) | |
| **Idle Backend Disconnected** | - | Constantly Bright (Yellow) | |
| **Authorize RFID Authorization Pass** | | Flicker 3s | |
| **Authorize RFID Authorization Fail** | | | Flicker 3s |
| **Handshaking** | Constantly Bright | - | - |
| **Charging** | Flicker | - | - |
| **Terminate** | Constantly Bright | - | - |
| **Complete** | Constantly Bright | - | - |
| **Maintenance Upgrade** | - | Flicker (Yellow) | |
| **Reservation** | - | Flicker | |

# 7. Screen Instructions

## 7.1 Status Bar

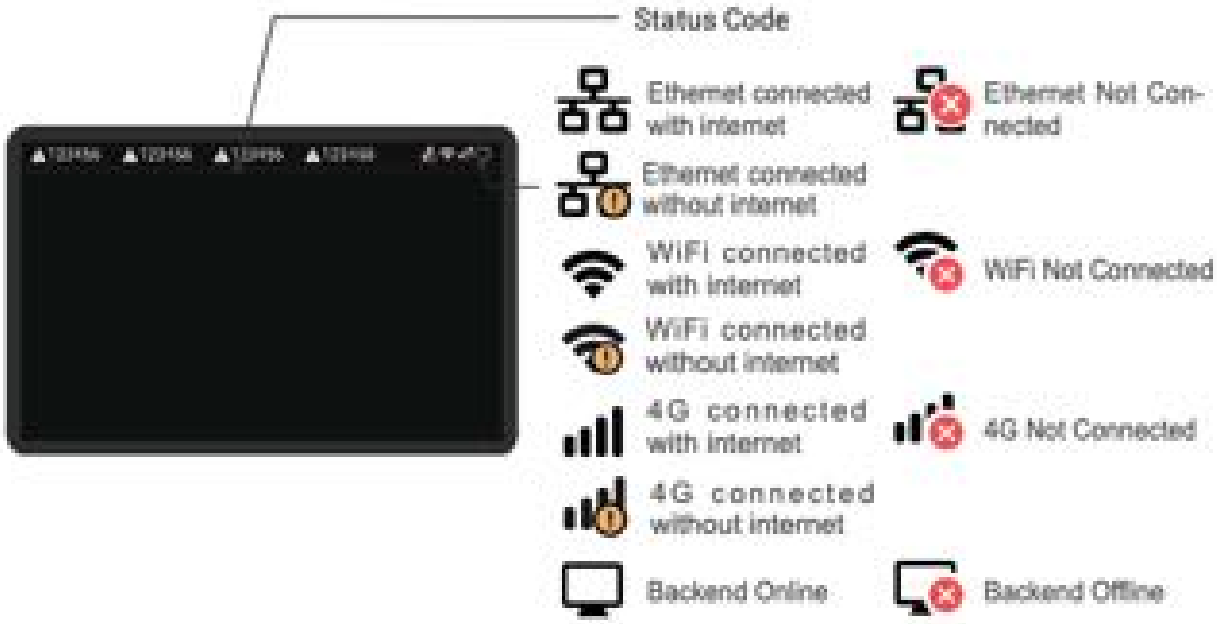

## 7.2 Status Code Table

**For latest status code, please visit our website*

| Status Code | Description |
|---|---|
| **011004** | RCD/CCID self-test fail |
| **011009** | Output relay welding |
| **011010** | Output relay driving fault |
| **011021** | WiFi module broken |
| **011036** | Rotary switch fault |
| **012200** | System input OVP |
| **012203** | System input UVP |
| **012212** | System input drop |
| **012216** | System output OCP |
| **012223** | System ambient/inlet OTP |
| **012233** | RCD/CCID trip |
| **012241** | WiFi module communication fail |
| **012242** | 3G/4G module communication fail |
| **012243** | RFID module communication fail |
| **012254** | Fail to create share memory |
| **012255** | CSU initialization failed |
| **012256** | Ground Fault |
| **012257** | MCU self-test Fault |
| **012262** | System output Circuit Short |
| **012344** | Meter IC communication timeout |
| **012345** | Pilot negative error |
| **013607** | CSU firmware update fail |
| **013622** | Disconnected from Internet through Ethernet |
| **013623** | Disconnected from Internet through WiFi |
| **013625** | Disconnected from AP through WiFi |
| **023703** | Pilot fault |

# 8. Installation Instructions

## 8.1 Safety Requirements

- Read this user manual thoroughly and make sure to review all local building and electrical codes before installing the AC charger. A qualified technician should install the AC charger according to the user manual and local safety regulations.
- Use appropriate protection when connecting to the main power distribution cable.
- Type B, C or D breaker with a rating current of 60Amp should be installed in the upstream AC distribution box.
- Disconnect switch for each ungrounded conductor of AC input shall be provided by others in accordance with the National Electric Code, ANSI/ NFPA 70.
- Verify that the Wall Connector is properly grounded. The ground connection must be bonded in the upstream power supply for proper operation. Check all physical connections, including the wire box terminals, electrical panel(s), and wire box. In residential power supplies, check the bond between ground and neutral at the main panel. If connected to a step- down transformer, contact the transformer's manufacturer for direction on how to bond the ground connection.

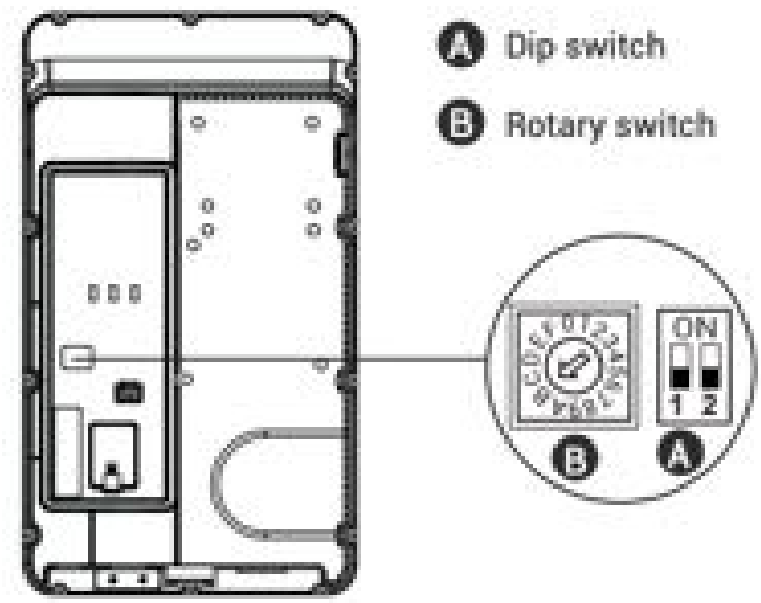

## 8.2 Power Grid Connection and Grounding Type

- This AC charger supports different power grid connections and grounding types. You can configure through the setting dip switch. Setting methods are shown below.
- Before setting the dip switch, make sure the input power is turned OFF.
- Use a non-conductive object to set the dip switch.

| | Switch 1 (Power Grid Type) | Switch 2 (Grounding System) |
|---|---|---|
| ON | LN | IT |
| OFF | LL | TT-TN |

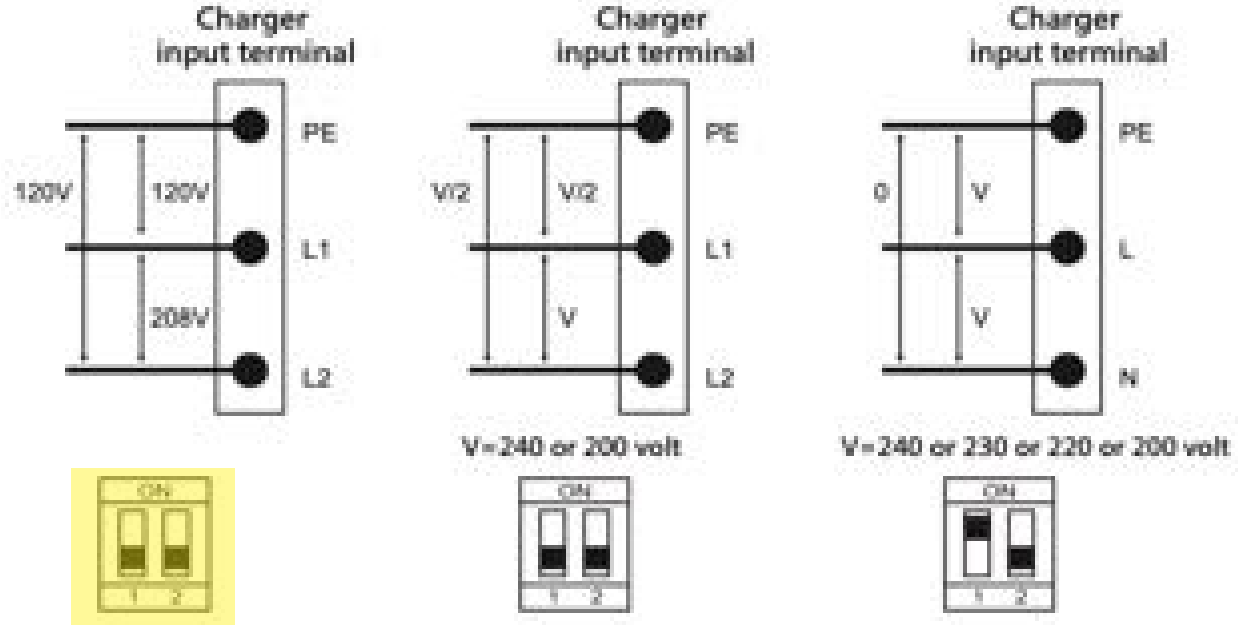


***Note 1:** The default value in North America and Japan is (LL / TT-TN).*
***Note 2:** The default value for other regions is (LN / TT-TN).*
***Note 3:** If it is not the above standard grid type, please contact our technical staff for assistance and confirmation.*

## Maximum Output Current

This AC charger can support different maximum output current through the setting rotary switch. Setting methods are shown below:

- Before setting the rotary switch, make sure the input power is turned OFF.
- Use a non-conductive object to set the rotary switch.


| Switch Setting Number | 0 | 1 | 2 | 3 | 4 | 5 | 6 | 7 |
|---|---|---|---|---|---|---|---|---|
| Maximum Output Current | Test Mode | 6A | 8A | 10A | 13A | 16A | 20A | 25A |

| Switch Setting Number | 8 | 9 | A | B*1 | C | D | E | F |
|---|---|---|---|---|---|---|---|---|
| Maximum Output Current | 30A | 32A | 40A | 48A | Invalid Setting | Invalid Setting | Invalid Setting | Invalid Setting |

*** Note 1: The default is 48A.**

## 8.3 Packing List

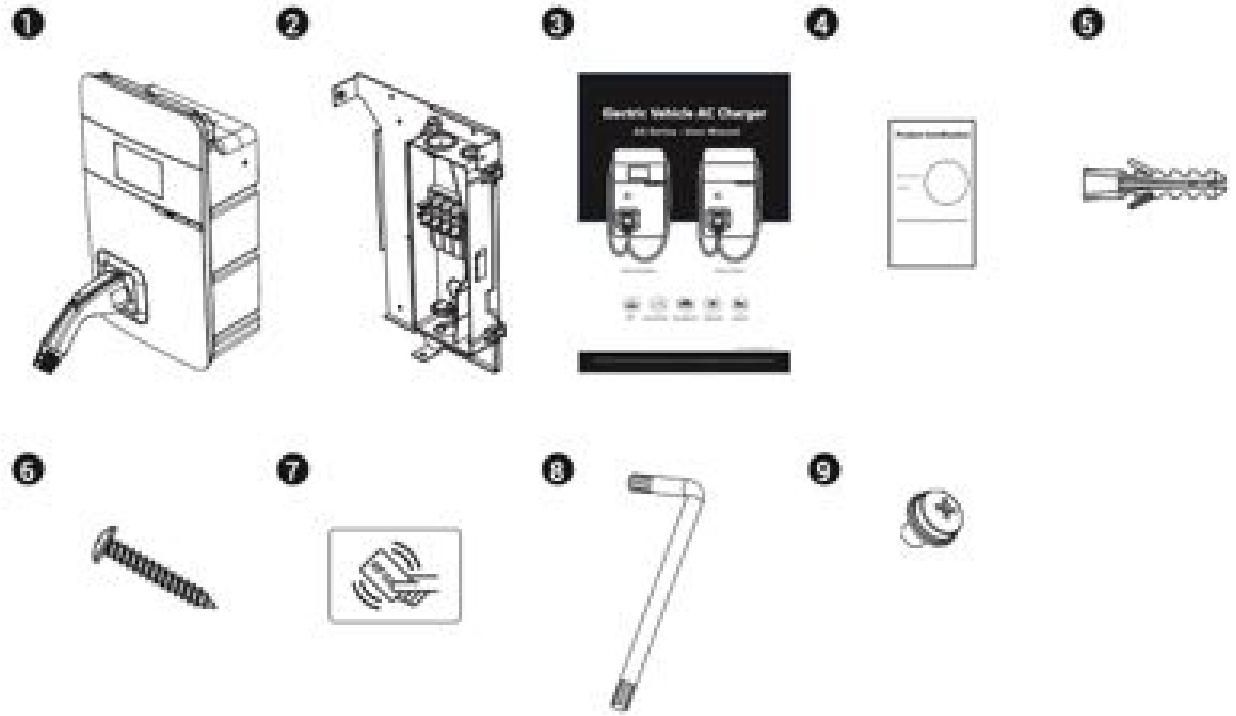


| No. | Product Name | Quantity | Note |
|---|---|---|---|
| 1 | AC Charger (With Charging Cable) | 1 | |
| 2 | Wall-Mount Bracket & Inlet Box | 1 | |
| 3 | User Manual | 1 | |
| 4 | Product Certification | 1 | |
| 5 | Expansion Screw | 4 | |
| 6 | M5 Self-Tapping Screws | 4 | |
| 7 | RFID Card | 2 | |
| 8 | Torx/T30 L-Wrench | 1 | |
| 9 | M5 Screw | 5 | |

## 8.4 Tools and Materials Required

Tools required before installing the charger onto the Wall-Mount Bracket are:

- Wire stripper
- Crimpers for ring terminals
- Phillips screwdriver for M4 – M6 1-3/8 inch or 34 mm drill bit
- Voltmeter or digital multimeter (for measuring AC voltage at the installation site)
- The inserting cable should meet the best waterproof performance requirements. It is recommended to use a 3 core / 6AWG or 14mm2 cable (XLPE-90°C, THHN-90°C, or equivalent) to pull the cable from the distribution box. The maximum outer diameter of the cable should be 16mm–23mm.
- Level ruler
- Pencil or marker
- Machine drill
- Ring terminal (recommend type 14-5) for 6 AWG wire, and fixed by M5 slotted head screw.
- It is recommended to use 1-inch liquidtight flexible metal conduit compliant with NEMA 4 class
- Slotted head screwdriver for M5

## 8.5 Wall-Mount Bracket Installation Requirements

Before installing the wall-mount bracket, you should confirm that the loading capacity of the wall can reach a weight of 40 kg. When installing on a cement wall, you can use the included expansion screw to install the bracket and use a cement drill to drill holes on the cement wall (Ø8mm) following the hole spacing in accordance with 3.2.

When installing on a wooden wall, you can directly use the included M5 self-tapping screws to install the wall-mount bracket and use the wall- mount backplane to lock and install on the wall directly.

## 8.6 AX Installation Requirements

- To select the best location and position to install the wall-mount unit, you should first determine the parking position of the vehicle to ensure the charging connector can be easily inserted into the vehicle charging inlet.
- The wall-mount unit should be located:
- In a well-ventilated area. Avoid installing in closed boxes or near to
- exothermic chargers.
- 1.2 meters or 4 feet above the floor.
- 250mm (10inches) from any obstacles to allow cables to loop
- around the wires and to allow related maintenance.
- If in an enclosed garage, on the side of vehicle charging inlet.

## 8.7 Installation Steps

**Warning for Wi-Fi and 4G versions:**

Due to different congenital environments, it is recommended to first conduct Wi-Fi and 4G module network signal tests before finalizing your settings. It is recommended that the RSSI (Received Signal Strength Indication) value should be higher than -65dBm. If it is lower than this value, it may result in a weak Wi-Fi or 4G connection or disconnection due to external interference in the area.

## STEP 1

**Installation of the wall-mounted metal plate**

Take out the wall-mounted metal plate and locate all the installation holes. Use as a template to mark on the wall with a pencil or any tool, and insert 4 sets of expansion bolts (M5X40mm) into the wall, as shown in the figure. Install the wall-mounted metal plate on the cement wall.

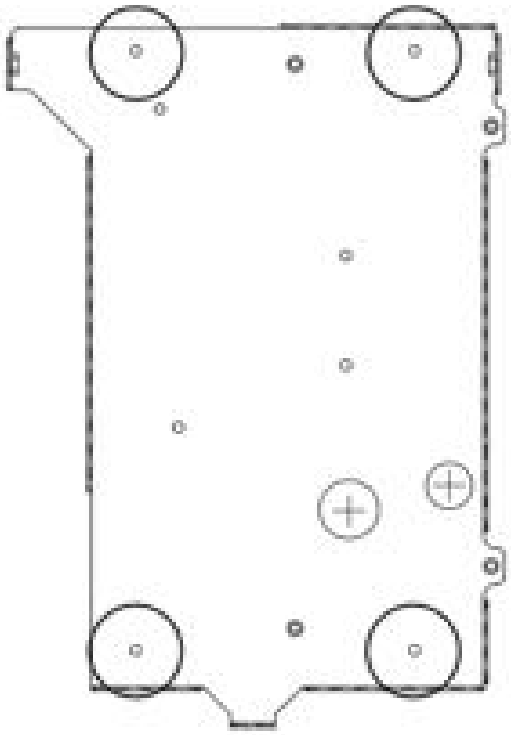

## STEP 2

**Installation of the wire box**

First, remove the waterproof cover at the inlet end marked as "AC In". Then, install the accessory "1-inch liquidtight flexible metal conduit" at the inlet of the power cord, and attach the wire box to the wall-mounted metal plate with screws.

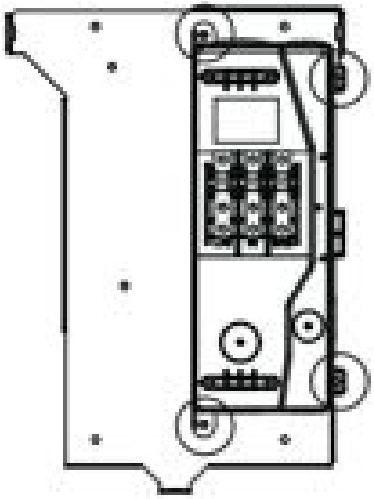

## STEP 3

**Installation of the AC power cord**

The cross-sectional area of the three power cords should be AWG 6 or 14mm2. The power cords should be fully crimped and connected with ring terminals. The ring terminals should be attached to the wire box with M5 screws, with a tightening torque of 40kg-cm. Please refer to label on the wire box for the correct positions, where the positions are L1/L, GND/PE, and L2/N, respectively, from the left to the right.

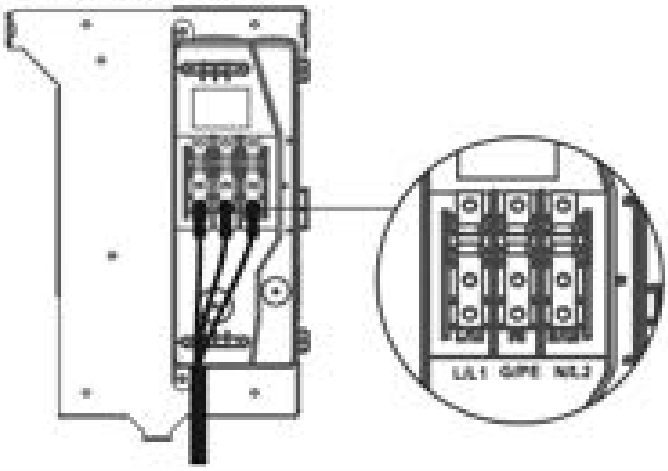

## STEP 4

**Installation and setting of the network cable**

Remove the waterproof plug from the Internet interface at the bottom left of the wire box. Feed the network cable into the wire box through the network cable entrance. Once the network cable is in, insert the RJ45 connector into the connection port on the back of the charger.

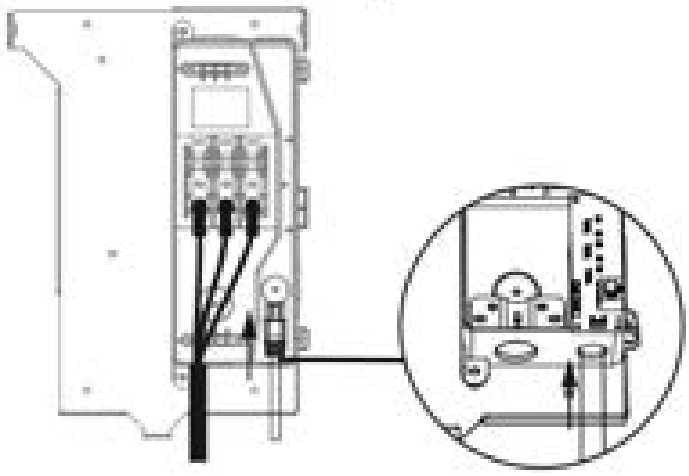

## STEP 5

**Setting of the power supply type and grounding type**

There are different settings depending on the LAN and the country where the machine is installed. Please refer to Section 9.2 "Power Grid Connection and Grounding Type" for details.

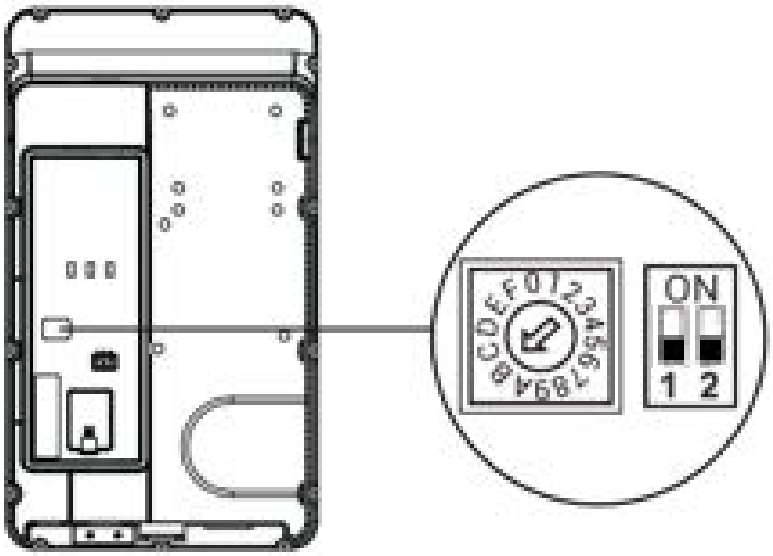

## STEP 6

**Installation of the SIM card (only available for 4G models)**

Attention: Please confirm that the SIM card password has been removed prior to installation, as the charger post does not support SIM cards with passwords.

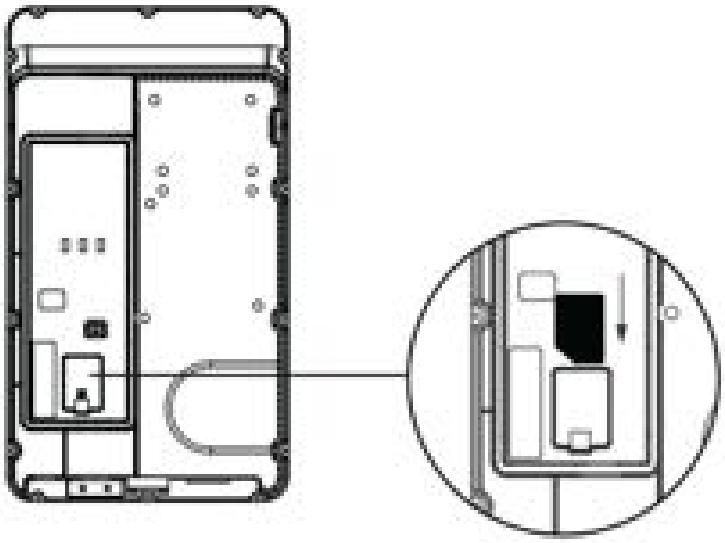

## STEP 7

**Installation of the charger**

First, connect the network cable to the charger.

NOTE! The network cable needs to be connected to the correct socket.

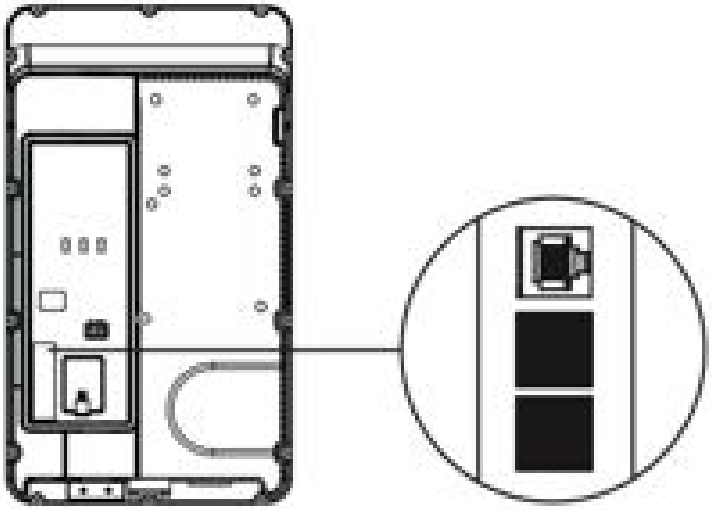

Next, move the charger equipment in a horizontal direction, so that the AC connector of the equipment can be inserted into the conductive spring plate of the wire box. Meanwhile, apply pressure to the equipment, so that the three screw holes of the equipment align with the three holes of the wall-mounted metal plate.

Finally, tighten with the M6 plum screws in the order left - right - bottom, with a tightening torque of 30 kg-cm.

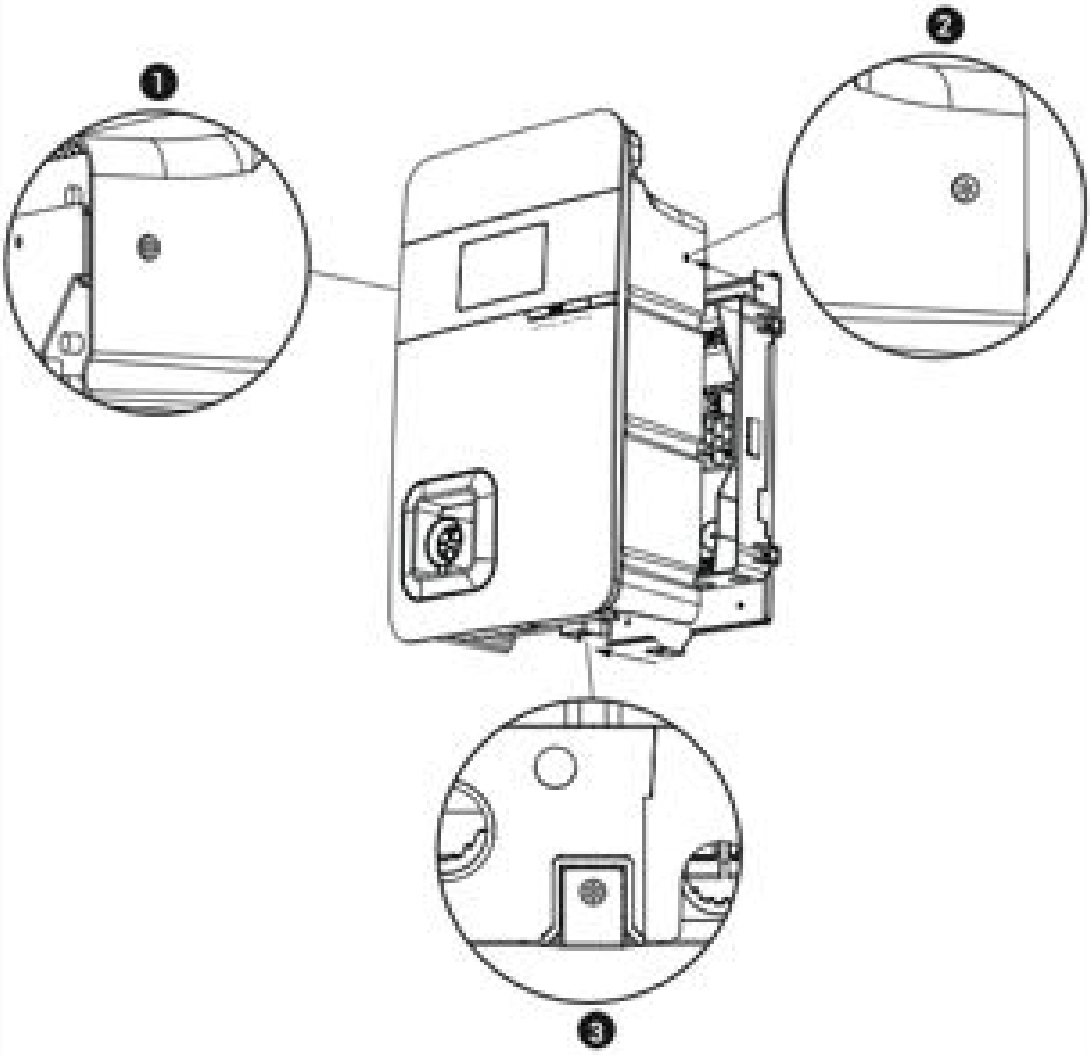

## STEP 8

**Power on the machine for setting of the charger**

For setting instructions, please refer to Section 10.1–10.4 "Charger Standard Setting instructions"

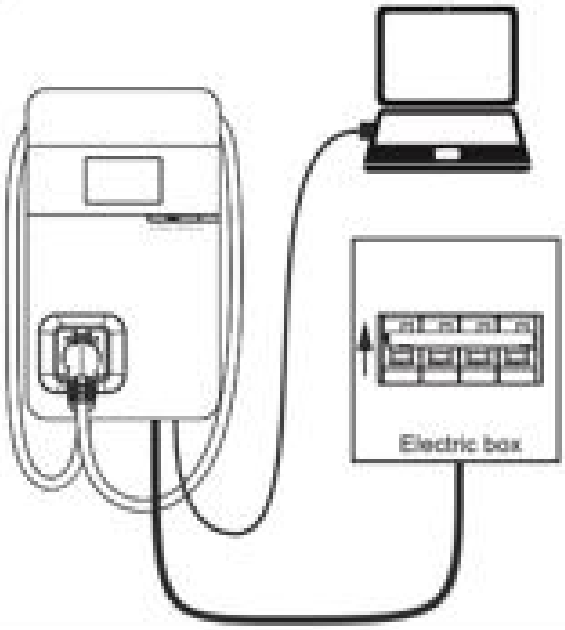


## STEP 9

**Power off and unplug the connection**

Power off the machine and remove the network cable once setting is completed (For those who are in a wired network environment, please go straight to Step 10)

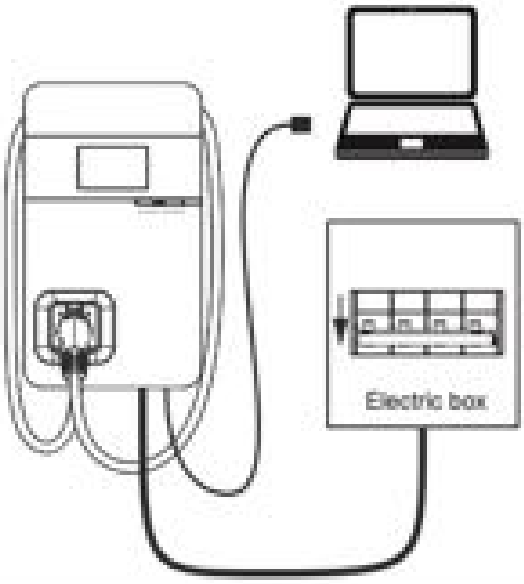

Remove the three screws on the charger in the order bottom - right - left. Pull the network cable out of the wire box , then remove the network cable. Install the waterproof plug, then re-install the charger and wire box.

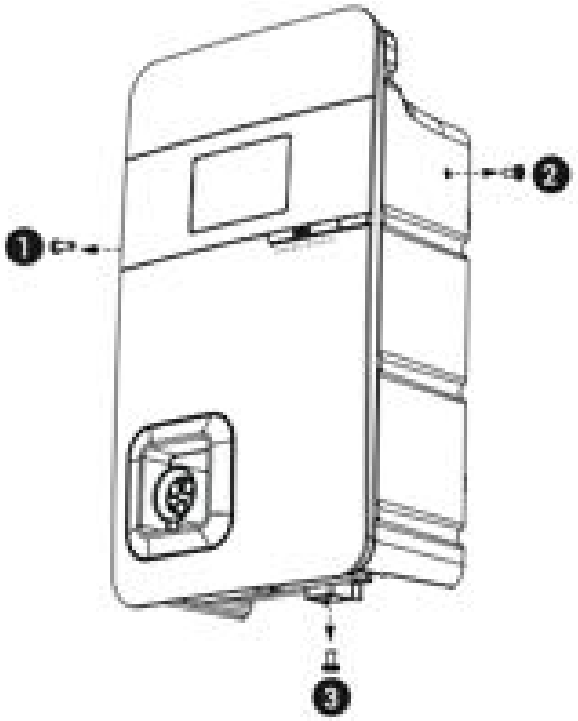


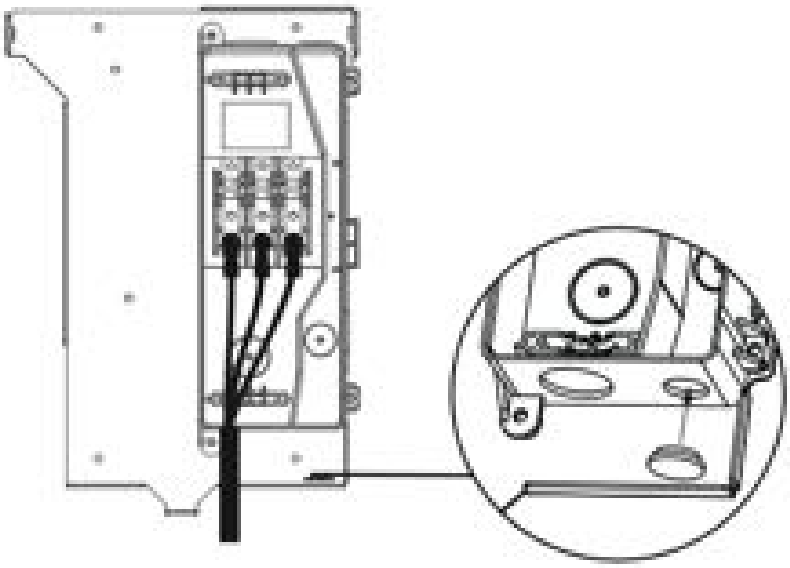

Let the three screw holes of the equipment align with the three holes of the wall-mounted metal plate, then tighten with the M6 plum screws in the order left - right - bottom, with a tightening torque of 30 kg-cm.

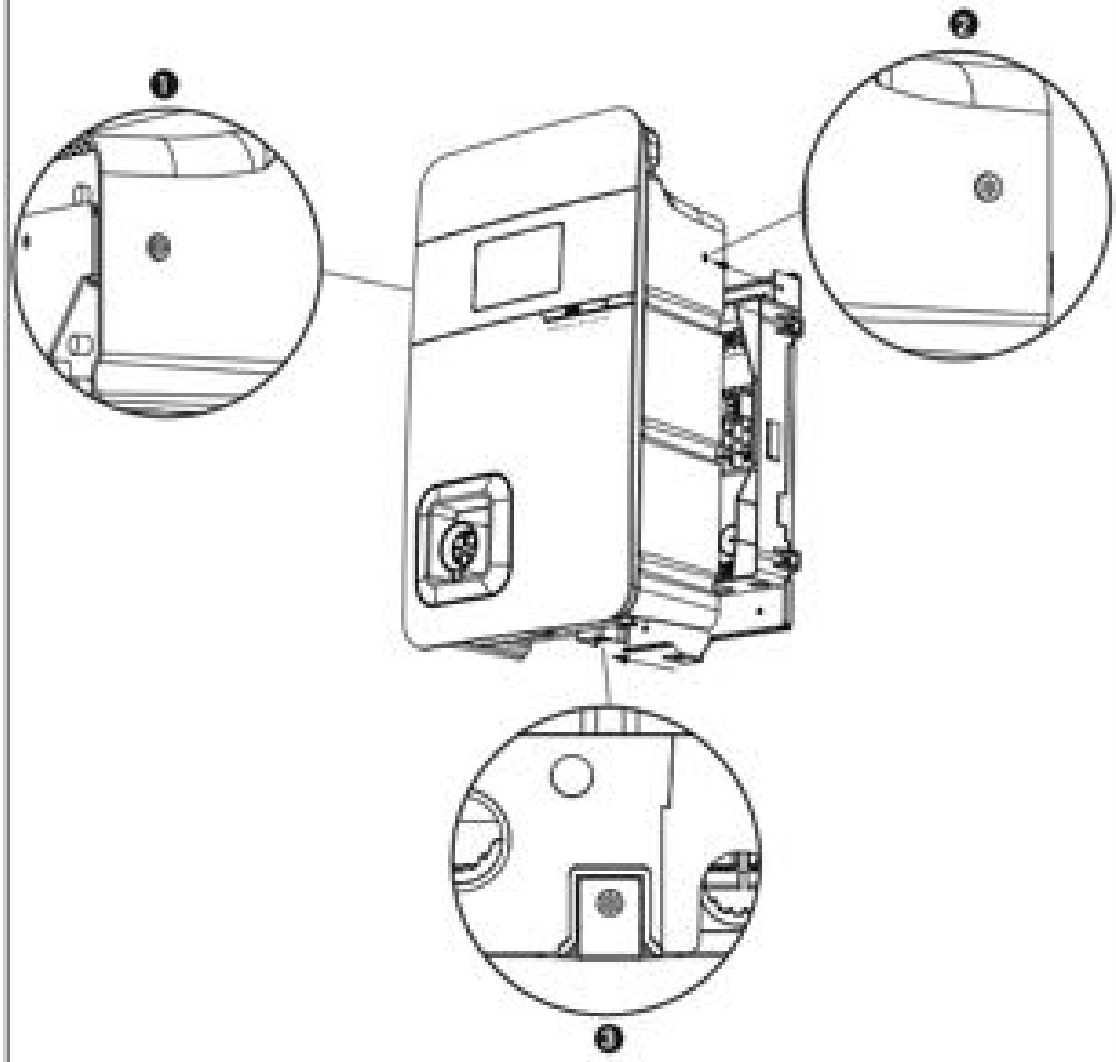

## 9. Operating Instructions

| | |
|---|---|
| 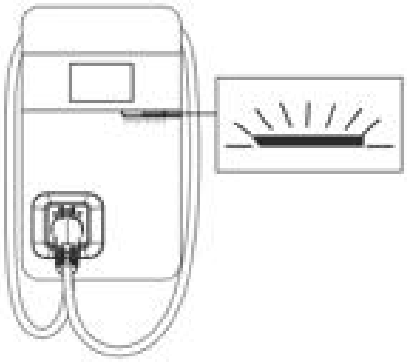 | **Standby - Green Light**<br>Wait to see the standby light show STEADY GREEN. When the charger is not operated for 120 seconds, it will enter sleep mode.<br>When the machine is a connected to the backend, the standby light remains GREEN, and it becomes SLEEP GREEN when the machine enters sleep mode.<br>When the machine is not connected to the backend, the standby light remains YELLOW, and it becomes SLEEP YELLOW when the machine enters sleep mode. |
| 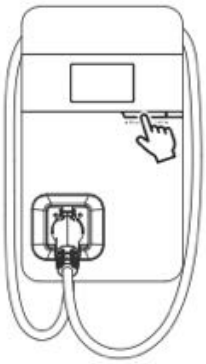 | **Press the button to wake up the charger.** |
|  | **Waiting for Charging - Blue Light**<br>After the vehicle connector is connected to the vehicle inlet, the CHARGE light is constantly lit. |
| 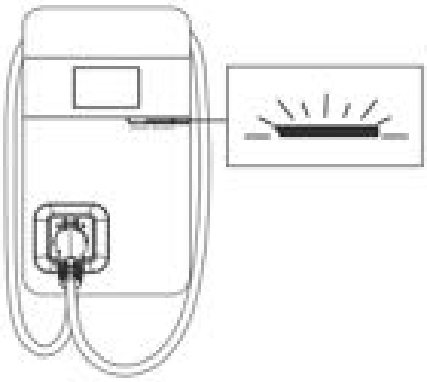 | **Charging - Blue Light Flashing**<br>The CHARGE light flashes while charging.<br><br>**Fault - Red Light**<br>The red light is lit when a fault occurs. Please refer to "8.8 Error and Warning Messages" for detailed information |

## 9.1 Error and Warning Message

| Status | Red | Remark |
|---|---|---|
| Input OVP | One flash followed by a 3-sec pause | Please measure the input voltage to see if it is higher than 275V |
| Input UVP | Two flashes followed by a 3-sec pause | Please measure the input voltage to see if it is lower than 160V |
| Output OCP | Three flashes followed by a 3-sec pause | When the charging current on the car shows overloaded, please disconnect the charging gun and then try to initiate charging again. If the situation recurs, please contact the service personnel of the car maker for identification of problems. |
| OTP | Four flashes followed by a 3-sec pause | If the temperature of the charger is abnormal, please turn off the charger power to cool down the machine before powering it on again. If the situation recurs, please power off and stop using the machine immediately, then contact customer service. |
| RCD Abnormal | Five flashes followed by a 3-sec pause | Disengage the charging gun and try the operation again. If the situation recurs, please contact customer service. |
| Ground Fault*1 | Six flashes followed by a 3-sec pause | Please confirm grounding status*1 |
| Control Pilot Fault | Flicker | When communication between the vehicle and charger is abnormal, please disengage the charging gun and operate again. If the situation recurs, please contact customer service. |
| MCU Self-Test Fail | Constantly Bright | Contact Customer Service |
| RCD Self-Test Fail | Constantly Bright | Contact Customer Service |
| Relay Self-Test Fail | Constantly Bright | Contact Customer Service |
| RCD Abnormal Stop Charging*2 | Constantly Bright | Contact Customer Service*3 |
| Output OCP Stop Charging*2 | Constantly Bright | Contact Customer Service*3 |
| OTP Stop Charging | Constantly Bright | Contact Customer Service |

*1 Verify that the Wall Connector is properly grounded. The ground connection must be bonded in the upstream power supply for proper operation. Check all physical connections, including the wire box terminals, electrical panel(s), and wire box. In residential power supplies, check the bond between ground and neutral at the main panel. If connected to a step-down transformer, contact the transformer's manufacturer for direction on how to bond the ground connection.

*2 Withdrawing and plugging back in the charging gun can exit this stop- charging mode.

*3 If this stop-charging mode is frequently triggered, please contact customer service for technical solutions.

# 10. Maintenance and Repair

## 10.1 Daily Maintenance

Please keep the charger clean and install it in a clean area with low humidity. Do not install it in an environment near the sea, with high levels of oil, humidity or dust.

- Avoid moisture or water in the charger. If water or excess moisture gets into the charger, immediately power off the charger to avoid immediate danger. Proceed to contact the appropriate maintenance personnel before the next use.
- If there is any damage or dirt on the vehicle connector, charging cable, or vehicle connector holder, please contact maintenance personnel immediately.
- Use the charger correctly. Do not hit or press hard on the case. If the case is damaged, please contact a professional technician.
- Avoid placing the charger near to hot objects and in high- temperature locations, and keep it away from dangerous substances such as flammable gases and corrosive materials.
- Do not place external objects or heavy objects on the charger, in order to avoid danger.

## 10.2 Maintenance Spares

- This product is covered by a two-year parts warranty. If you have a technical issue, contact a dealer and speak to a technical support representative.

# Certifications

## UL / cUL

UL is an OSHA-accredited Nationally Recognized Testing Laboratory (NRTL) that tests products, including EV charging stations, to applicable UL standards for safety.

EVPassport products have been meticulously engineered to comply with all relevant safety standards and the National Electrical Code (NEC), and they have successfully undergone rigorous UL testing to attain UL listing.

## FCC

The Rosa is proudly FCC certified, ensuring compliance with stringent electromagnetic interference regulations set by the Federal Communications Commission (FCC). With this certification, our chargers guarantee minimal interference with other electronic devices and provide a reliable and safe charging experience for EV owners.

## CTEP

Our electric vehicle charging station proudly holds the CTEP certification from the California Department of Food and Agriculture's Division of Measurement Standards. Complying with NIST Handbook 44, our chargers ensure accurate energy measurement, transparent pricing, and a reliable charging experience. Trust in our commitment to sustainability and customer satisfaction for a greener future.

## Energy Star

Our EV chargers are proudly ENERGY STAR certified by the Environmental Protection Agency (EPA) for their exceptional energy efficiency in standby mode. They meet specific efficiency standards, conserving energy when not actively charging. Compared to regular chargers, our units consume 40% less energy when idle.

## OpenADR 2.0b

The Rosa holds is OpenADR 2.0b certified, demonstrating its compatibility with advanced demand response protocols. This certification ensures seamless communication and integration with smart grid technologies, enabling efficient energy management and contributing to a more sustainable and resilient grid system."